FM1065-58

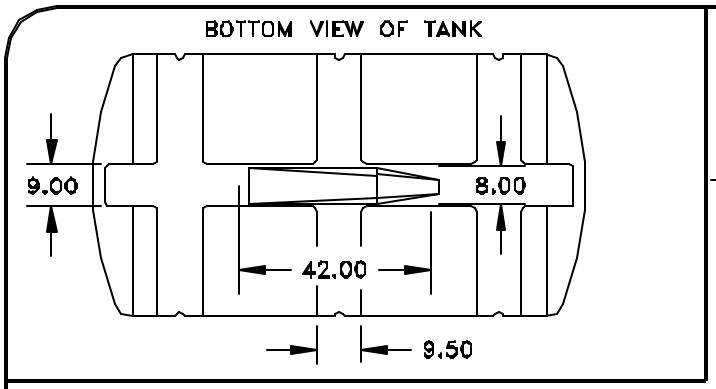

PROPRIETARY DATA

PROPERTY OF ACE ROTO-MOLD MFG., INC. INFORMATION FURNISHED HEREIN IS THE PROPERTY OF ACE ROTO-MOLD MFG., INC.AND SHALL NOT BE USED, DISCLOSED TO OTHERS, OR COPIED WITHOUT THE EXPRESSED WRITTEN CONSENT OF ACE ROTO-MOLD MFG., INC. ALL RIGHTS RESERVED.

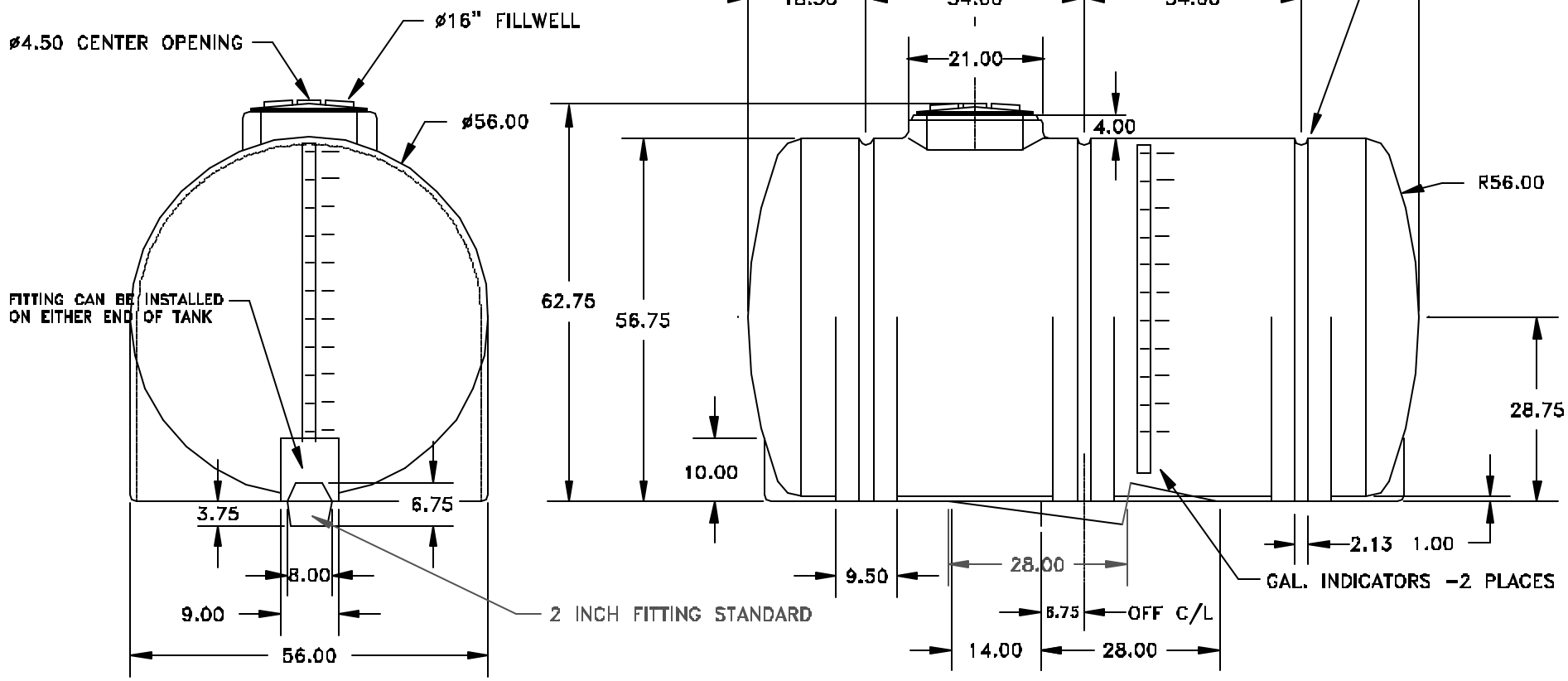

REV	DESCRIPTION	DATE	APPRD

DRAWN / DATE: REH/1/30/96

APPRD. / DATE: REH/1/30/96

MATERIAL / SHOT WEIGHT			
M111	M135	U625	P938
	300		

ALL DIMENSIONS ARE IN DECIMAL INCHES
TOLERANCES UNLESS OTHERWISE SPECIFIED
± .5% @ 68° F

THIRD ANGLE PROJECTION
ANSI 14.5M

NOTES:
1. NOM. WALL = .375
2. SHRINK ALLOWANCE = 2.75%
3. RESIN IS NATURAL COLOR
4. FDA APPROVED RESIN
5. U.V. STABILIZED

ACE ROTO-MOLD
A DIVISION OF DEN HARTOG INDUSTRIES, INC.
HIGHWAY 60 SOUTH, HOSPERS, IOWA

CLIENT / DESCRIPTION: ACE 1065 GAL. LEG TANK WITH SUMP

SCALE: N.S.

PART NO.: FM1065-58