© DEN HARTOG INDUSTRIES, INC.

Copyright. All information furnished within this document, electronic file or design correspondence is the property of Den Hartog industries, Inc. and shall not be used, disclosed to others or copied without the expressed written consent of Den Hartog Industries, Inc.

WO2600-VT

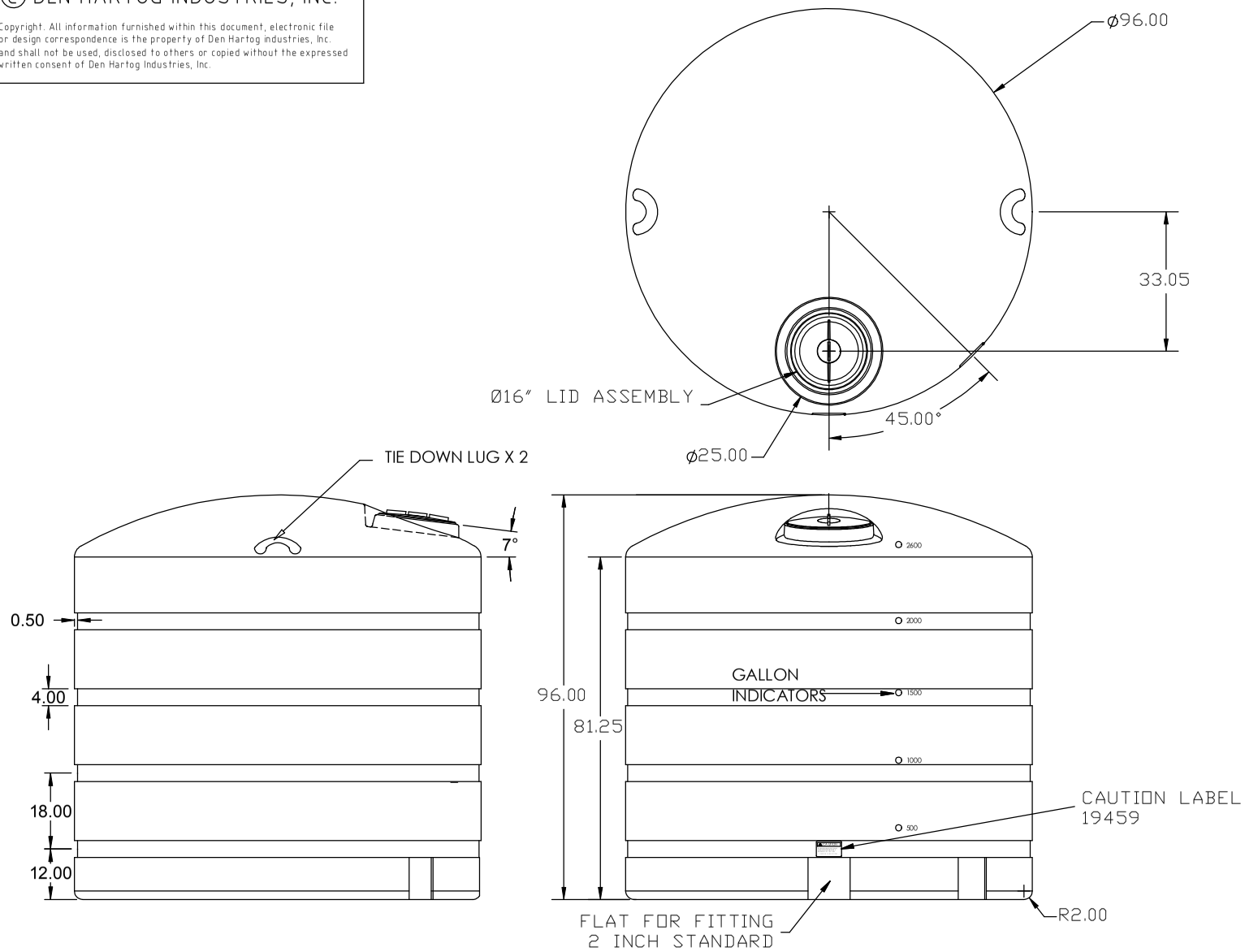


## ⚠ CAUTION

THIS TANK IS DESIGNED FOR STORAGE OF WATER OR CHEMICALS WITH A SPECIFIC GRAVITY OF 1.0 OR LESS

Failure to heed may result in tank failure

19459

Ace Roto-Mold $H_2O$
A DIVISION OF DEN HARTOG INDUSTRIES, INC.

| REV | DESCRIPTION | BY / DATE | CCN |
|---|---|---|---|
| | | | |
| | | | |
| | | | |

ALL DIMENSIONS ARE IN DECIMAL INCHES
TOLERANCES UNLESS OTHERWISE SPECIFIED

| POLYETHYLENE | METAL |
|---|---|
| ±1% @ 68° F | DECIMAL ± .125"<br>FRACTION ± 1/4"<br>ANGLE ± 1° |

THIRD ANGLE PROJECTION
ANSI 14.5M

DRAWN / DATE: DHJ 8/26/08

APPRD. / DATE: REH 8/28/08

SHOT WEIGHT: 400 LBS

SHIPPING WEIGHT: 402 LBS

FINISH:

MATERIAL
1.) MEDIUM DENSITY POLYETHYLENE
2.) P.N. 12550

NOTES:
1.) DARK GREEN COLOR

**Den Hartog**
INDUSTRIES, INC.
Ace Roto-Mold Injection Molding Blow Molding Sowjoy
4010 HOSPERS DRIVE S. BOX 425, HOSPERS, IOWA 51238-0421

DESCRIPTION: 2600 GALLON VERTICAL WATER TANK

SCALE: N.S.

PART NO.: WO2600-VT